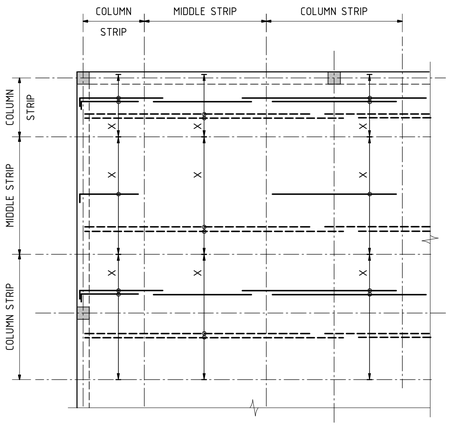

FLAT PLATE / SLAB NOTATION

SCALE 1:20

NOTES:

1. FOR REINFORCEMENT, DIMENSIONS ETC. REFER TO PLANS
2. BARS SHALL BE EVENLY SPACED WITHIN THEIR RESPECTIVE BAND WIDTHS AS DIMENSIONED ON PLAN.
3. DETAILS ABOVE APPLY UNLESS SHOWN OTHERWISE ON PLANS.
4. DISTRIBUTION BARS ARE NOT SHOWN ABOVE. REFER TYPICAL BANDED SLAB.
5. FOR BAR LENGTHS REFER FLAT SLAB OR FLAT PLATE STANDARD DETAILS.
6. ALTERNATIVELY, BARS OF THE SAME LENGTH ARE TO BE STAGGERED. LONG AND SHORT TOP BARS SHALL BE PLACED ALTERNATIVELY, WITH AT LEAST 50% OF THESE BEING THE LONGER BAR.
7. THIS DETAIL SHOWS REINFORCEMENT IN ONE DIRECTION ONLY FOR CLARITY.
8. FOR PRIMARY AND SECONDARY DIRECTIONS OF REINFORCEMENT, SEE PLANS.
9. BARS MAY BE SHOWN INDICATIVELY ON PLAN AS A SINGLE LINE.

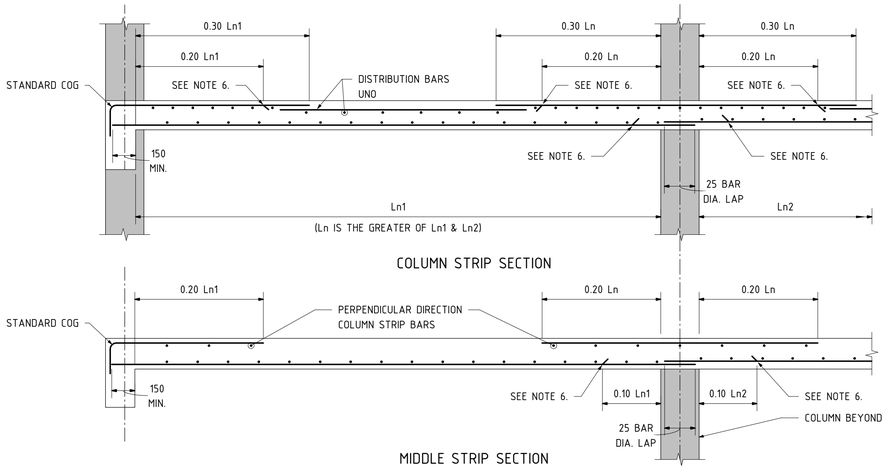

FLAT PLATE / SLAB DETAILS

SCALE 1:20

NOTES:

1. FOR REINFORCEMENT, DIMENSIONS ETC. REFER TO PLANS
2. BARS SHALL BE EVENLY SPACED WITHIN THEIR RESPECTIVE BAND WIDTHS AS DIMENSIONED ON PLAN.
3. DETAILS ABOVE APPLY UNLESS SHOWN OTHERWISE ON PLANS.
4. TOP DISTRIBUTION BARS ARE NOT SHOWN ABOVE. REFER TYPICAL BANDED SLAB.
5. FOR PRIMARY AND SECONDARY DIRECTIONS OF REINFORCEMENT REFER TO PLANS.
6. ALTERNATIVELY, BARS OF THE SAME LENGTH ARE TO BE STAGGERED. LONG AND SHORT TOP BARS SHALL BE PLACED ALTERNATIVELY, WITH AT LEAST 50% OF THESE BEING THE LONGER BAR.

DISTRIBUTION REINFORCEMENT TABLE

FOR INTERNAL SLABS WITH MINOR DEGREE OF CRACK CONTROL OR UNRESTRAINED

N12-300	FOR SLAB THICKNESS EQUAL OR LESS THAN 200mm
N12-250	FOR SLAB THICKNESS EQUAL OR LESS THAN 250mm
N12-200	FOR SLAB THICKNESS EQUAL OR LESS THAN 300mm
N12-170	FOR SLAB THICKNESS EQUAL OR LESS THAN 375mm
N12-150	FOR SLAB THICKNESS EQUAL OR LESS THAN 400mm

ALL DISTRIBUTION REINFORCEMENT TO BE LAPPED WITH MAIN TOP BARS

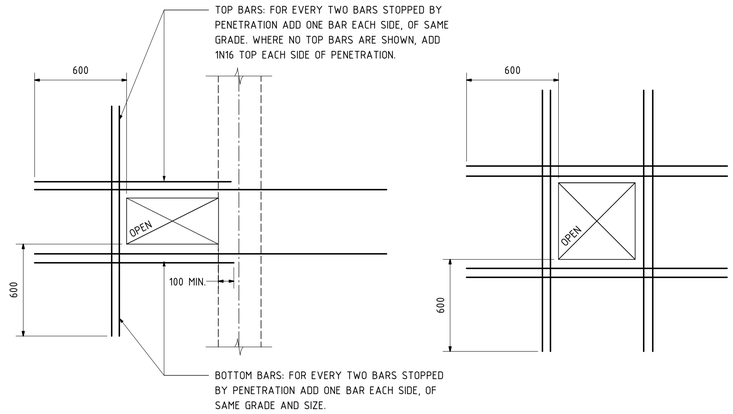

TYPICAL SLAB PENETRATION DETAIL

NOTES:

1. PENETRATION LESS THAN 300x300mm, BUT LESS THAN 1000x1000mm, USE DETAIL ABOVE.
2. PENETRATION GREATER THAN 300x300mm, BUT LESS THAN 1000x1000mm, USE DETAIL ABOVE.
3. PENETRATION GREATER THAN 1000x1000mm, USE ABOVE UNLESS NOTED OTHERWISE.
4. LOCATION OF PENETRATIONS TO BE THE APPROVAL OF THE SUPERINTENDENT.

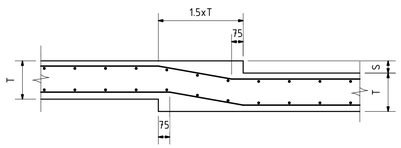

S = LESS THAN 0.2T

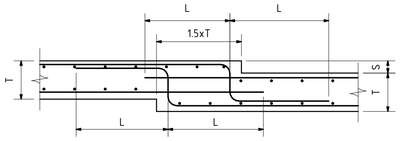

S = LESS THAN 0.8T

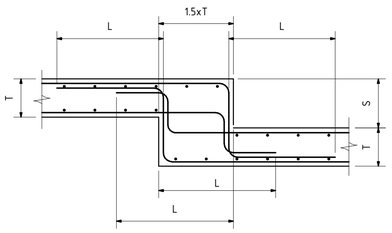

S = GREATER THAN 0.8T - LESS THAN 1.5T

TYPICAL SUSPENDED FLOOR SETDOWNS

SCALE 1:20

NOTE:

1. DETAILS APPLY UNLESS SHOWN OTHERWISE ON THE DRAWINGS.
2. 'T' REFERS TO SLAB OR BAND THICKNESS.
3. SETDOWNS GREATER THAN 1.5xT TO ENGINEERS DETAILS.
4. MINIMUM INTERNAL DIAMETER OF ALL BENDS SHALL BE 10xBAR DIAMETER.
5. SETDOWN AND STEPS ARE DENOTED ON PLANS AS:

6. REFER TENSION LAP SPLICE TABLE FOR 'L' DIMENSIONS

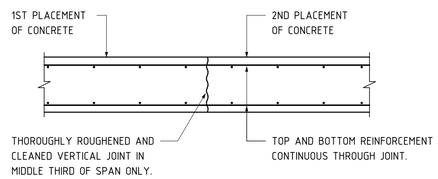

SUSPENDED FLOOR CONSTRUCTION JOINTS (CJ)

NOTES:

1. LOCATION OF JOINT TO BE TO THE APPROVAL OF THE SUPERINTENDENT

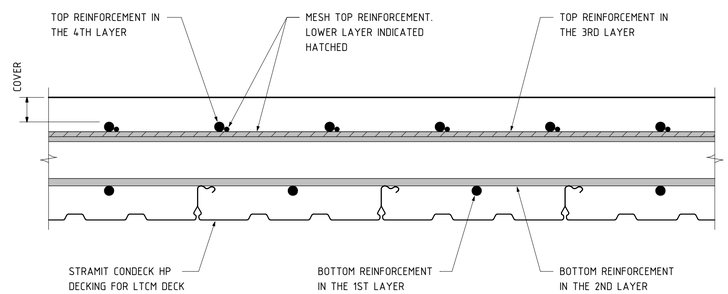

REINFORCEMENT LAYERING DETAIL FOR LTCM SLABS

SCALE: 1 : 5

GENERAL NOTES: CONTRACTOR TO CHECK ALL DIMENSIONS ON SITE. REFER ANY DISCREPANCIES TO ARCHITECT FOR A DECISION, PRIOR TO COMMENCING ANY WORK OR PREPARING ANY SHOP DRAWING.

REV	DATE	DESCRIPTION	DRN	CHD
A	29.04.19	ISSUED FOR BUILDING PERMIT	JAG	MD

FORTH
2 CLIVE STREET, WEST PERTH, WA 6005 P) 9485 2921
admin@forthconsulting.com.au

CLIENT: Griffin

ARCHITECT: URBANize ARCHITECT

PROJECT:
GLENBURNIE TERRACE APARTMENTS
1 GLENBURNIE TERRACE
PLYMPTON SA 5038

DRAWING TITLE:
STRUCTURAL
STANDARD CONCRETE DETAILS
SHEET 2

BUILDING PERMIT

DRAWN:	JAG	APPROVED:	
DESIGN:	MD	DATE:	15.04.19
CHECKED:		SCALE:	NTS
PROJECT NUMBER:	19-080		REV
DRAWING NUMBER:	S012		A